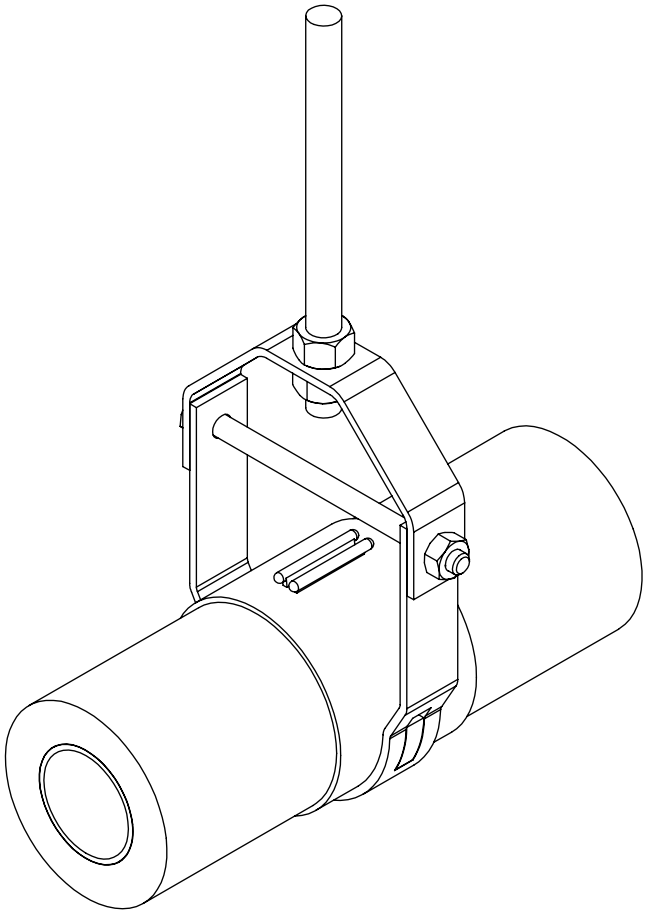

INSULATION COUPLING "CLEVIS SYSTEM"

THE HOLDRITE® Insulation Coupling "Clevis System" provides a void for inserting insulation from both sides of the hanger. The clevis hanger is steel and the insert is plenum rated plastic. Available for ½" – 3" tubing sizes and for ½" or 1" insulation wall thickness.

HUBBARD ENTERPRISES
HOLDRITE®
"Converting Makeshift Methods into Engineered Solutions"SM